ZET Storing System

MENU

Storing System

Furniture—Product Sheet
menu.as

by KaschKasch

ZET Storing Shelves

Product Type

Storing System

Environment

Indoor

Dimensions (cm / in)

1x2	1x4
W: 92,5 cm / 36,4"	W: 92,5 cm / 36,4"
D: 40 cm / 15,7"	D: 40 cm / 15,7"
H: 76,5 cm / 30,1"	H: 154,5 cm / 60,8"

2x2	2X4
W: 183 cm / 72"	W: 183 cm / 72"
D: 40 cm / 15,7"	D: 40 cm / 15,7"
H: 76,5 cm / 30,1"	H: 154,5 cm / 60,8"

Colours

Black (RAL 9005) / Black

ZET is a smart shelving system with a light, airy, and minimalistic appearance. The whole system consists of two components only: the wooden u-shaped shelves and the metal frame construction. By assembling those two parts, you are able to build several different formations in order to achieve the expression you prefer – right now and going forward. ZET is produced in high quality materials and the stabilising system provides a firm stability. The design is easily assembled and can be changed and remodelled whenever you want.

About the Designer

Florian Kallus and Sebastian Schneider founded Kaschkasch in 2011. The German designer duo always strives to get the maximum out of the minimum by breaking every idea down to its essential elements. Every piece of their work has a little something to discover – something that speaks of the designers' love for details.

ZET Storing System
Technical Specifications

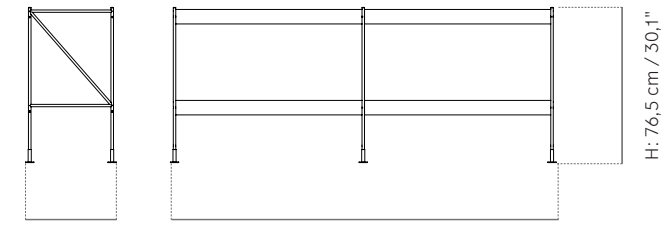

D: 40 cm / 15,7" W: 183 cm / 72"

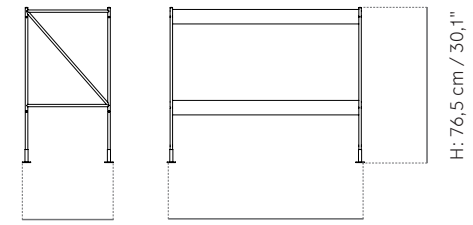

D: 40 cm / 15,7" W: 92,5 cm / 36,4"

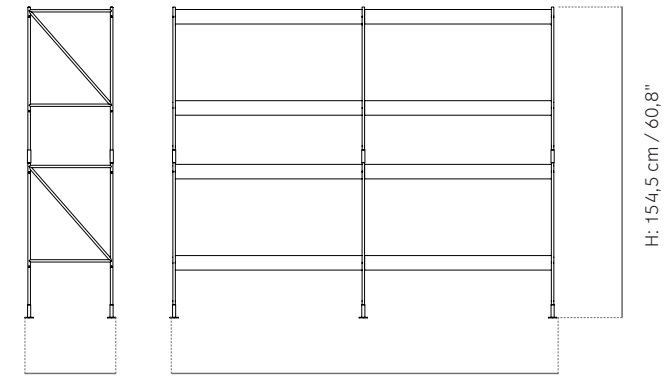

D: 40 cm / 15,7" W: 183 cm / 72"

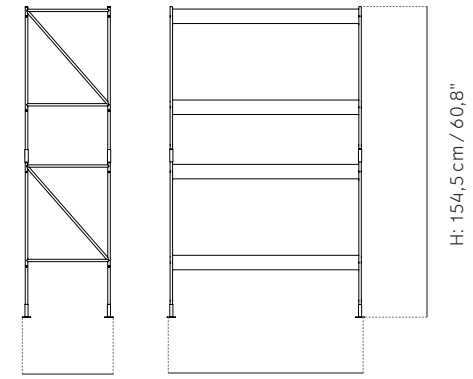

D: 40 cm / 15,7" W: 92,5 cm / 36,4"

Production Process

Frames are made from welded steel rods with powder coated finish. Shelves are made from oak veneered MDF, glued together in miter joints. The veneer finish is stained with a matt-lacquer top coat.

Materials

Frame:

Powder Coated Steel

Shelves:

MDF, Black Stained Oak Veneer

Colour Code

Black (RAL 9005)

Gloss

Gloss 10-15

Weight item (kg)

1x2: 15 kg

1x4: 30 kg

2x2: 27,5 kg

2x4: 55,5 kg

Test

N/A

Certifications

N/A

Packaging Type

Brown Box

Packaging Measurement (H * W * D)

1x2: 16 cm * 47 cm * 110 cm

1x4: 116 cm * 58 cm * 40 cm

2x2: 116 cm * 47 cm * 32 cm

2x4: 116 cm * 62 cm * 47 cm

Care Instructions

Use a soft dry cloth to clean. Do not use any cleaners with chemicals or harsh abrasives. Avoid using water.

ZET Storing System, 1x2

Black / Black

7312539

ZET Storing System, 1x4

Black / Black

7314539

ZET Storing System, 2x2

Black / Black

7322539

ZET Storing System, 2x4

Black / Black

7324539